文件資料管制 文件資料管制 文件資料管制 All rights reserved

全漢企業股份有限公司
FSP TECHNOLOGY INC.

TOTAL POWER SOLUTIONS

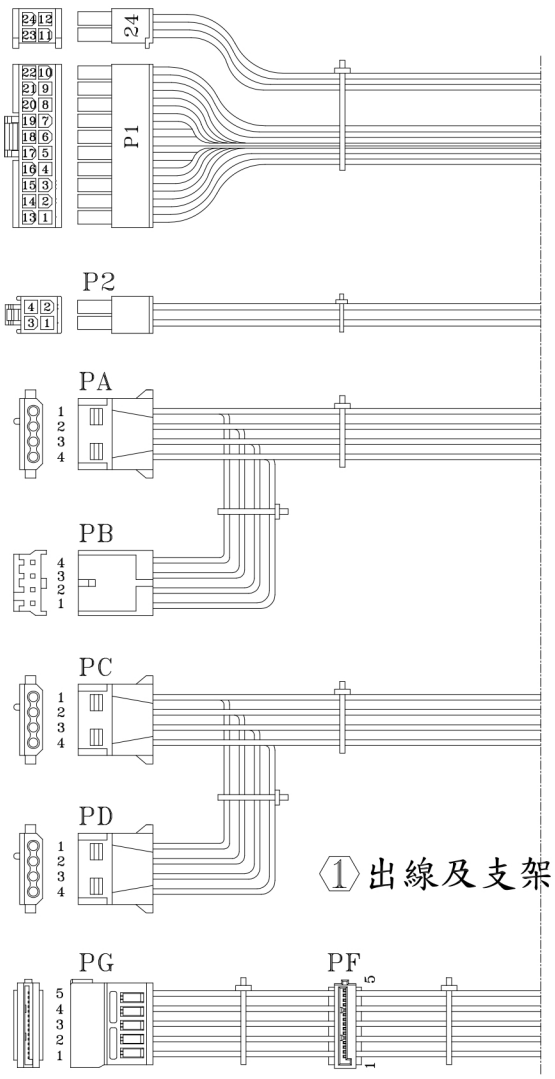

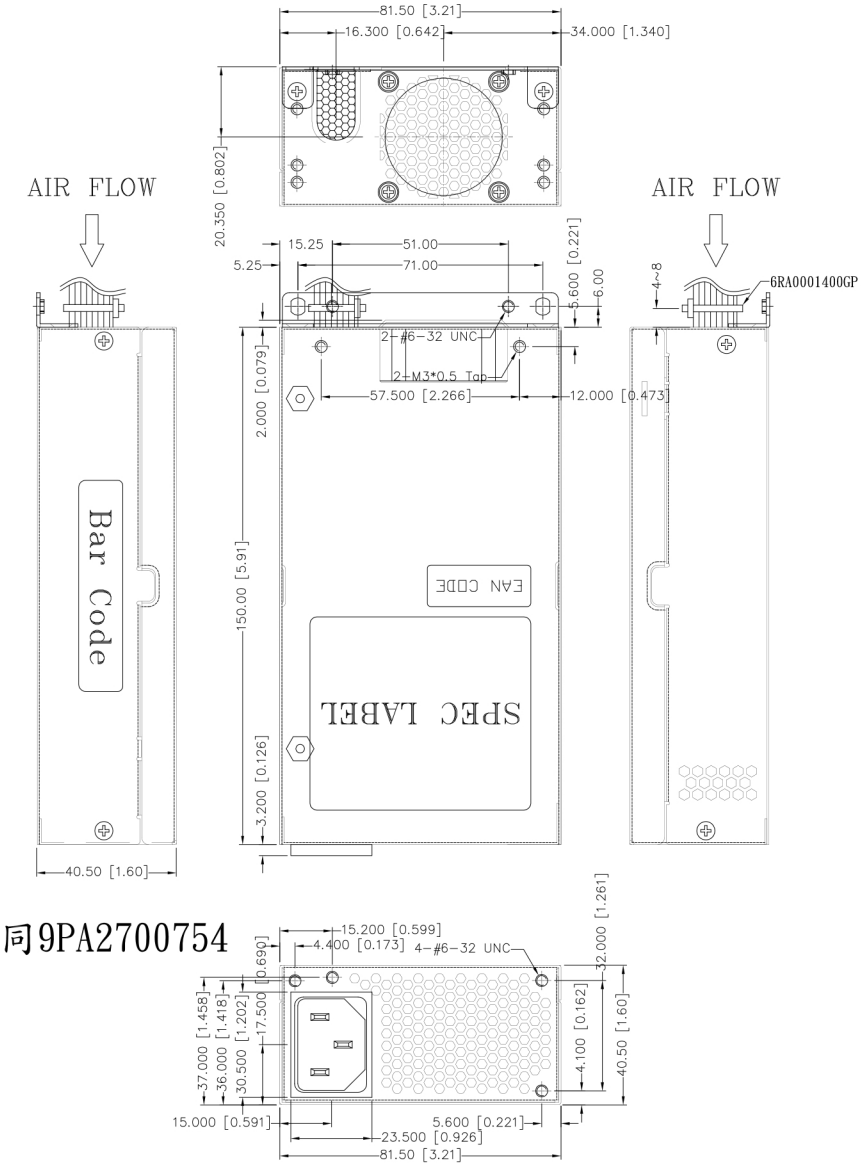

REF. D.	PIN NO.	SIGNAL	WIRE COLOR	GAUGE	CONNECTOR TYPE	LENGTH
P1/24	1	+3.3V	ORANGE	20	WST P20-I42002K11D+ P4-I42002K11D or EQUIV.	200±15 mm
	2	+3.3V	ORANGE	20		
	3	COM	BLACK	20		
	4	+5V	RED	20		
	5	COM	BLACK	20		
	6	+5V	RED	20		
	7	COM	BLACK	20		
	8	PW-OK	GRAY	22		
	9	+5Vsb	PURPLE	20		
	10	+12V	YELLOW	20		
	11	+12V	YELLOW	20		
	12	+3.3V	ORANGE	20		
	13	+3.3V	ORANGE	20		
		+3.3VS	BROWN	22		
	14	-12V	BLUE	22		
	15	COM	BLACK	20		
	16	PS-ON	GREEN	22		
	17	COM	BLACK	20		
	18	COM	BLACK	20		
	19	COM	BLACK	20		
	20					
	21	+5V	RED	20		
	22	+5V	RED	20		
	23	+5V	RED	20		
	24	COM	BLACK	20		
P2	1	COM	BLACK	18	MOLEX 39-01-2040 or EQUIV.	310±15 mm
	2	COM	BLACK	18		
	3	+12V	YELLOW	18		
	4	+12V	YELLOW	18		
PA	1	+12V	YELLOW	20	WST P4-A10202 or EQUIV.	250±15 mm
	2	COM	BLACK	20		
	3	COM	BLACK	20		
	4	+5V	RED	20		
PB	1	+5V	RED	20	AMP 171822-4 or EQUIV.	155±15 mm
	2	COM	BLACK	20		
	3	COM	BLACK	20		
	4	+12V	YELLOW	20		
PC	1	+12V	YELLOW	20	WST P4-A10202 or EQUIV.	310±15 mm
	2	COM	BLACK	20		
	3	COM	BLACK	20		
	4	+5V	RED	20		
PD	1	+12V	YELLOW	20	WST P4-A10202 or EQUIV.	155±15 mm
	2	COM	BLACK	20		
	3	COM	BLACK	20		
	4	+5V	RED	20		
PF	1	+3.3V	ORANGE	20	MOLEX SD-67582-001 or EQUIV.	310±15 mm
	2	COM	BLACK	20		
	3	+5V	RED	20		
	4	COM	BLACK	20		
	5	+12V	YELLOW	20		
PG	1	+3.3V	ORANGE	20	MOLEX SD-67582-001 or EQUIV.	155±15 mm
	2	COM	BLACK	20		
	3	+5V	RED	20		
	4	COM	BLACK	20		
	5	+12V	YELLOW	20		

1 出線及支架型式同9PA2700754

P/N.:9PA300H403

NOTE:
1. ALL THE LENGTH OF OUTPUT WIRES EXCLUDE HOUSING.
2. 公差: .XX=±0.5 [0.02]、.XXX=±0.25 [0.01]

UNIT:mm [inch]

MODEL NO. : FSP300-50FFB(F660001)		TITLE: ASSY	SHEET: 1 OF 1	REV:01
R&D(2)	PE	DRAWN	DATE	
		黃淑芳	SEP.12.2019	
INTERIOR COUNTERSIGN:				

建立時間:2019-09-16 09:26:05
OAD-00005354-R01.pdf
1/1禁止翻印外洩 All rights reserved