文件資料管制 文件資料管制 文件資料管制 All rights reserved

FSP TECHNOLOGY INC.

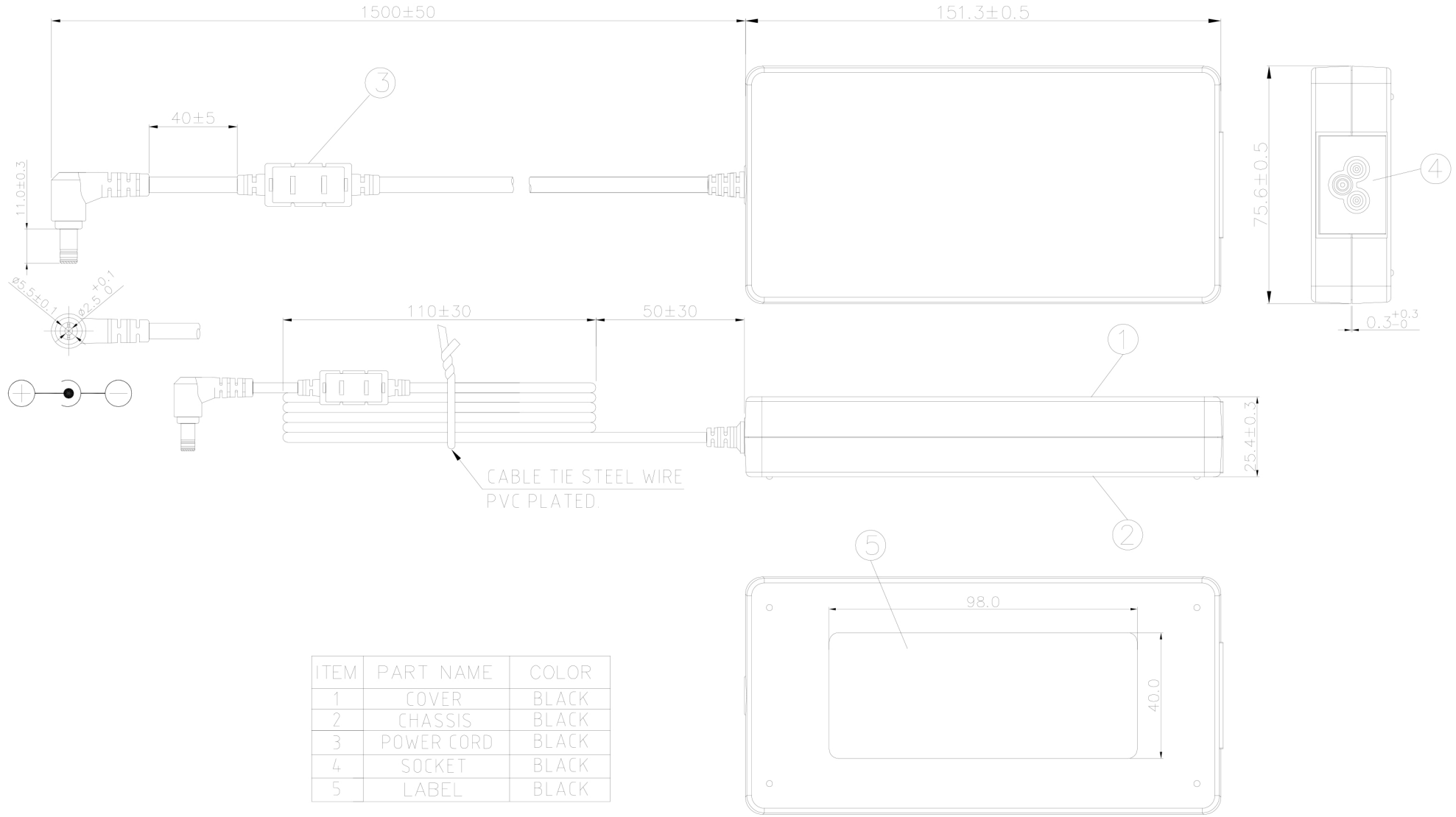

ITEM	PART NAME	COLOR
1	COVER	BLACK
2	CHASSIS	BLACK
3	POWER CORD	BLACK
4	SOCKET	BLACK
5	LABEL	BLACK

P/N.:9NA1205303

THIRD ANGLE PROJECTION

SCALE:
UNIT: mm

DIMENSIONAL TOLERANCES — HOLES : ±0.05 — ANGLES : ±0.5°

( )	( )	( )		( )
<30 :±0.2	DECIMALS	UP~100 :±0.2	250~300 :±0.4	UP~600 :±1.5
>30~100 :±0.3	X :±0.8	100~150 :±0.25	300~350 :±0.45	600~900 :±2.4
>100~200 :±0.4	X.X :±0.5	150~200 :±0.3	350~400 :±0.5	900~OVER :±3.1
>200~300 :±0.5	X.XX :±0.3	200~250 :±0.35		
ABOVE 300 :±0.8				

TPS TOTAL POWER SOLUTIONS

MODEL NO. : FSP120-ABBN2(D03001)	TITLE: Physical Dimension		SHEET: 1 OF1	REV:01
R&D3 Division	P E	ME	DATE	
L.J	Annie	Annie	2015/04/08	
INTERIOR COUNTERSIGN:				

Mechanical Drawing (外觀/機構圖) 表單編號 7000P-0111

1/1禁止翻印外洩 All rights reserved OAD15017061-R1.pdf 發行時間:2015/4/8 9:18 下午