文件資料管制 文件資料管制 文件資料管制

FSP TECHNOLOGY INC.

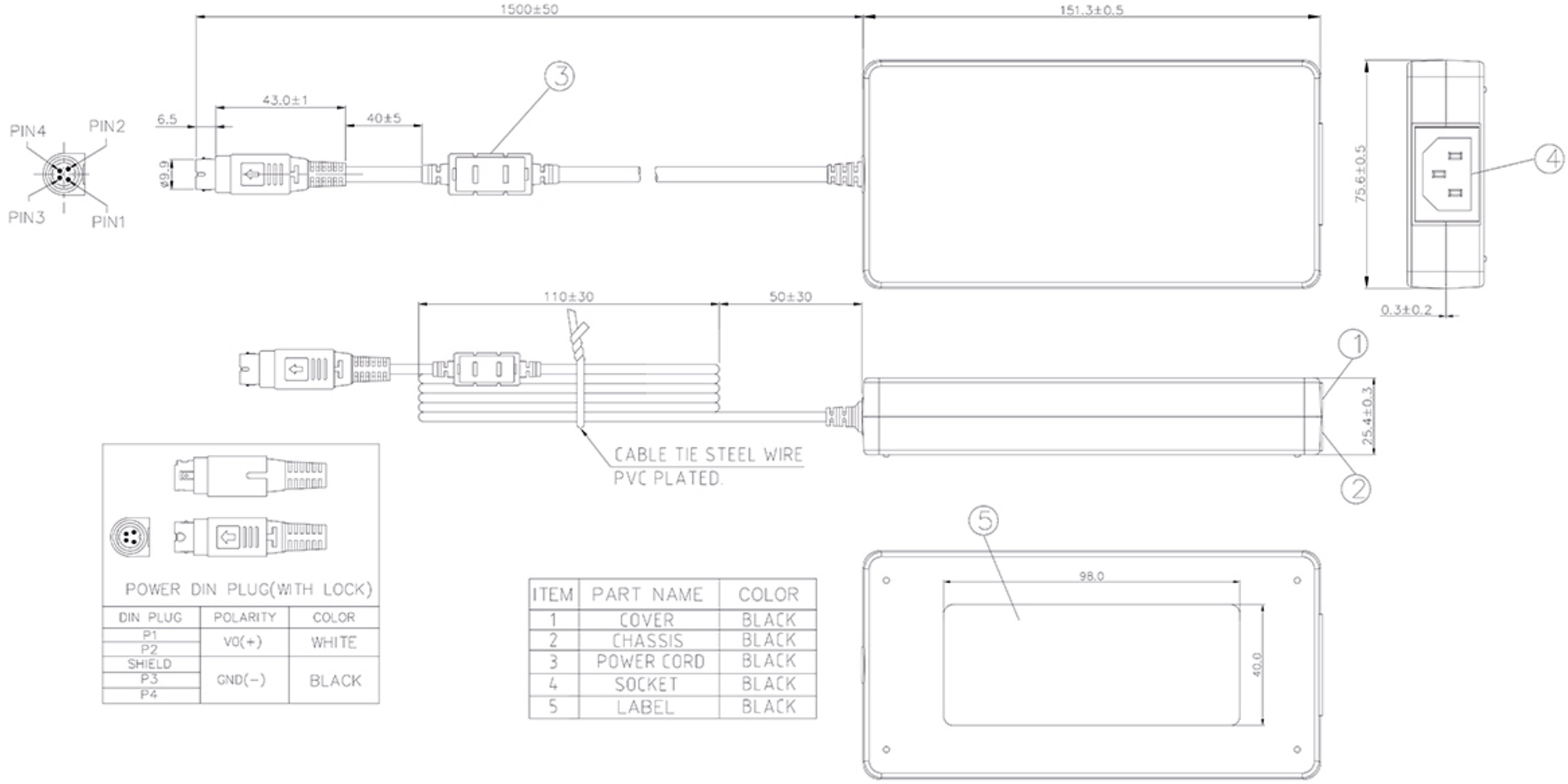

POWER DIN PLUG(WITH LOCK)

DIN PLUG	POLARITY	COLOR
P1	VO(+)	WHITE
P2		
SHIELD	GND(−)	BLACK
P3		
P4		

ITEM	PART NAME	COLOR
1	COVER	BLACK
2	CHASSIS	BLACK
3	POWER CORD	BLACK
4	SOCKET	BLACK
5	LABEL	BLACK

P/N.: 9NA1205101

THIRD ANGLE PROJECTION

SCALE:
UNIT: mm

DIMENSIONAL TOLERANCES — HOLES : ±0.05 ANGLES : ±0.5°

( )	( )	(∨)	( )
<30 :±0.2 >30~100 :±0.3 >100~200 :±0.4 >200~300 :±0.5 ABOVE 300 :±0.8	DECIMAL X :±0.8 XX :±0.5 XXX :±0.3	UP~100 :±0.2 100~150 :±0.25 150~200 :±0.3 200~250 :±0.35 250~300 :±0.4 300~350 :±0.45 350~400 :±0.5	UP~600 :±1.5 600~900 :±2.4 900~OVER :±3.1

TPS TOTAL POWER SOLUTIONS

MODEL NO. : FSP120-ABAN2(F66001)	TITLE: Physical Dimension	SHEET: 1 OF1	REV:01
R&D3 Division	P E	ME	DATE
L.J	Annie	Annie	2014/05/08
INTERIOR COUNTERSIGN:			

Mechanical Drawing (外觀/機構圖) 表單編號 7000P-0111

發行時間:2014/5/9 11:18 上午
OAD14027447-R1.pdf
1/1禁止翻印外洩